NTG16032D3/D5 Graphic 160x32 dots

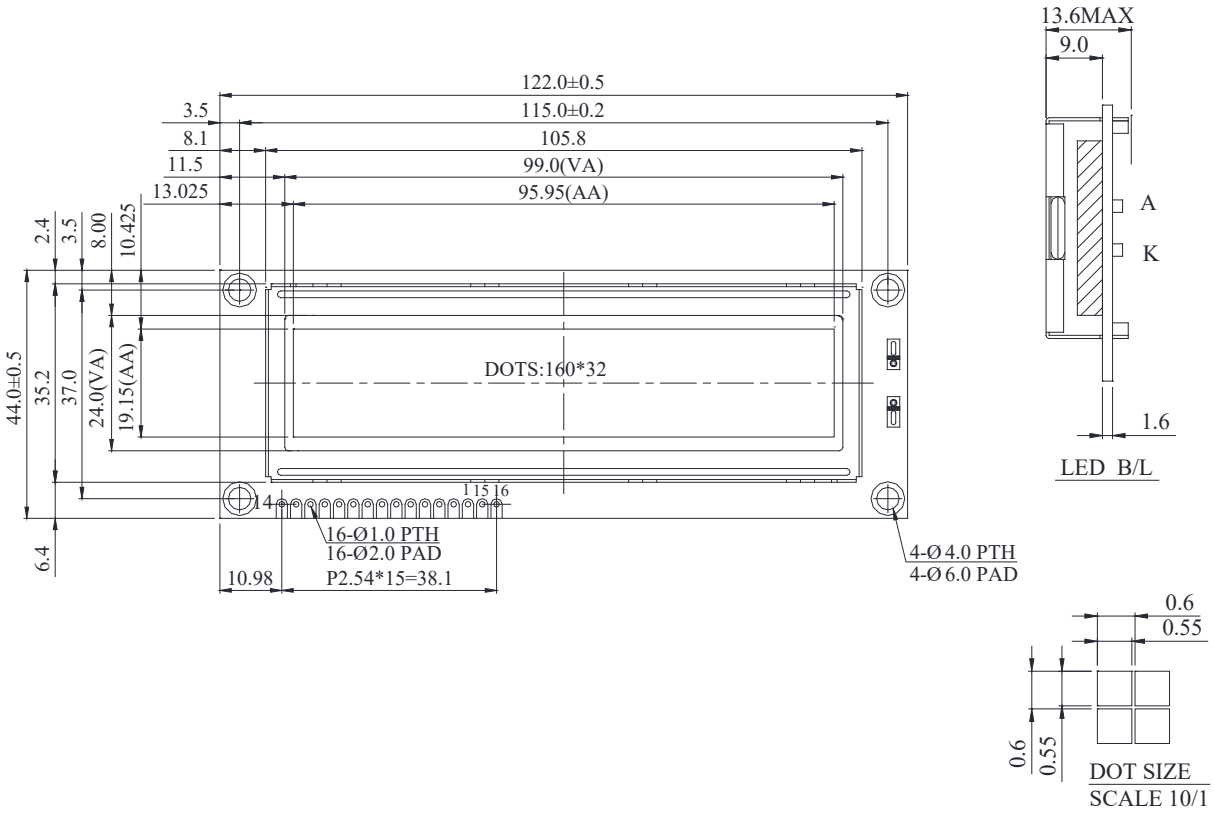

Feature

1. 160 x 32 dots
2. Built-in controller ST7920
3. 3.3V / 5V power supply
4. 1/32 duty cycle
5. N.V. Built-in
6. Chinese version

Pin No.	Symbol	Description
1	V_{SS}	Ground
2	V_{DD}	Power supply for logic
3	NC	No connection
4	RS	Data/ Instruction select signal
5	R/W	Read/Write select signal
6	E	Enable signal
7	DB0	Data bus line
8	DB1	Data bus line
9	DB2	Data bus line
10	DB3	Data bus line
11	DB4	Data bus line
12	DB5	Data bus line
13	DB6	Data bus line
14	DB7	Data bus line
15	A	Power supply for B/L +
16	K	Power supply for B/L -

Mechanical Data

Item	Standard Value	Unit
Module Dimension	122.0 x 44.0	mm
Viewing Area	99.0 x 24.0	mm
Mounting Hole	115.0 x 37.0	mm
Dot Pitch	0.6 x 0.6	mm
Dot Size	0.55 x 0.55	mm

Electrical Characteristics

Item	Symbol	Standard Value typ.	Unit
Input Voltage	VDD	3/5	V
Recommended LCD Driving Voltage for Normal Temp. Version module @25ºC	Vo-Vss	4.75	V