NTF57B TFT Graphic 320x240 dots

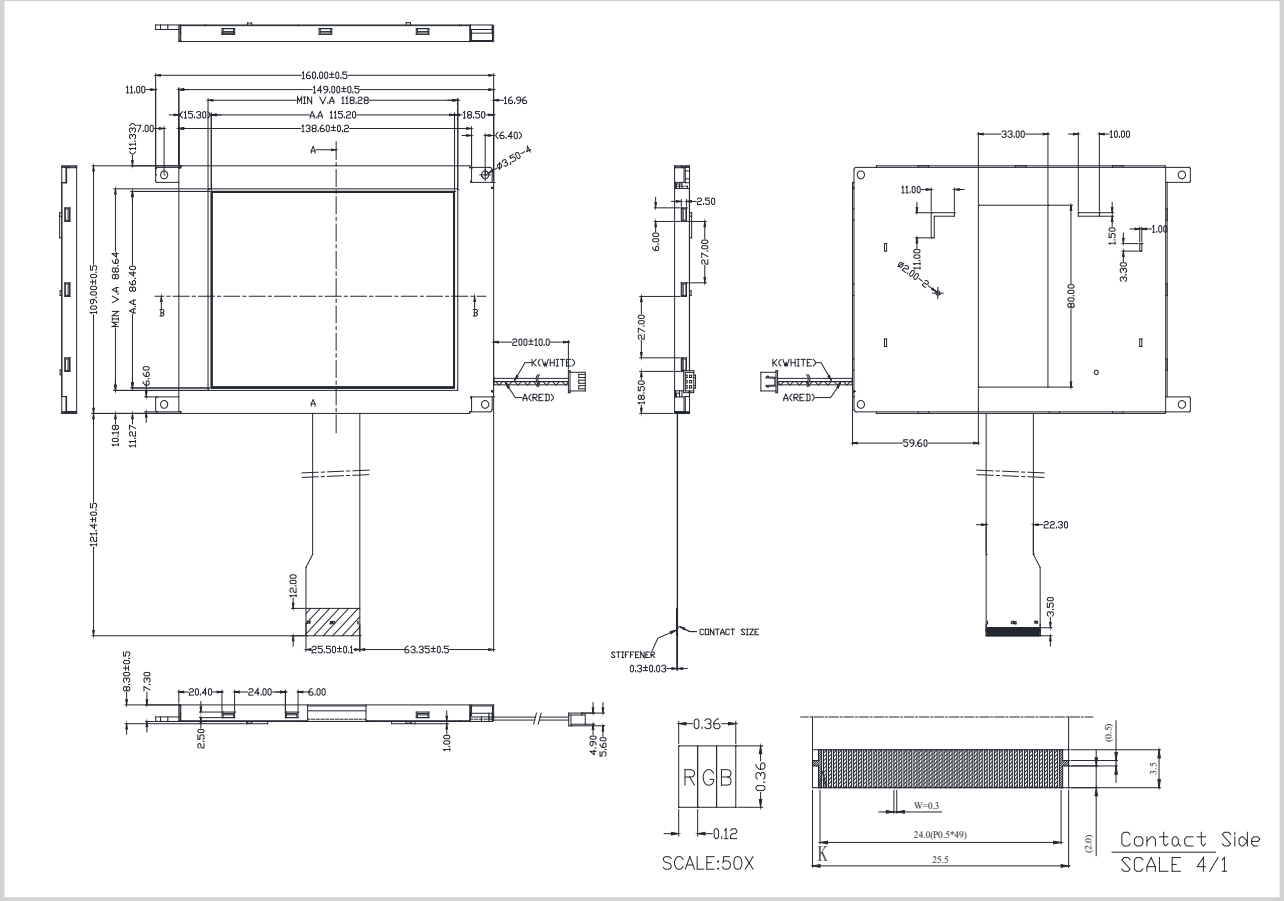

Feature

1. 5.7 inches Color TFT
2. Dot Matrix: 320xRGBx240
3. View Direction: 12 o'clock
4. Gray Scale Inversion Direction: 6 o'clock
5. 3.3V power supply of VCC
6. Option Control-board/RTP/CTP
7. Interface : RGB 888(DE, SYNC)

Pin No	Symbol	function
1	IF1	Input data format control
2	IF2	
3	POL	Polarity Signal connect to VCOM driving circuit.
4	RESET	Hardware reset
5	SPENA	Chip select
6	SPCL	Serial Clock
7	SPDA	Serial Data
8~15	B0~7	Blue Data bit
16~23	G0~7	Green Data bit
24~31	R0~7	Red Data bit
32	Hsync	Horizontal synchronous signal
33	Vsync	Vertical synchronous signal
34	Data	Dot data clock
35~36	AVDD	Analog power: 4.5V~5.5V
37~38	VCC	Digital power: 3V~3.6V
39	NPC	NTSC/PAL mode Auto detection result H:NTSC/L:PAL
40~41	VGL	Gate off power
42	UD	Up/down selection
43	VGH	Gate on power
44	LRC	Shift direction of device internal shift register control.
45	GND	System ground pin of the IC.
46~47	VCOM	VCOM driving input
48	ENB	Signal to settle the horizontal display position
49~50	GND	System ground pin of the IC.

Mechanical Data

Item	Standard Value	Unit
Module Dimension	160.0 x 109.0	mm
Viewing Area	118.28 x 88.64	mm
Active Area	115.20 x 86.40	mm
Dot Pitch	0.12 x 0.36	mm

Electrical Characteristics (Operationg conditions)

Item	Symbol	Min	Typ	Max	Unit
Supply Voltage	VCC	3	3.3	3.6	V
Supply Current	ICC	---	17	25	mA

Electrical Characteristics (B/L driving conditions)

Parameter	Symbol	Min	Typ	Max	Unit
LED Voltage	VBL+	9	---	10.5	V
LED Current	IL	---	140	---	mA