NTEO0128128B OLED Graphic 128x128 dots

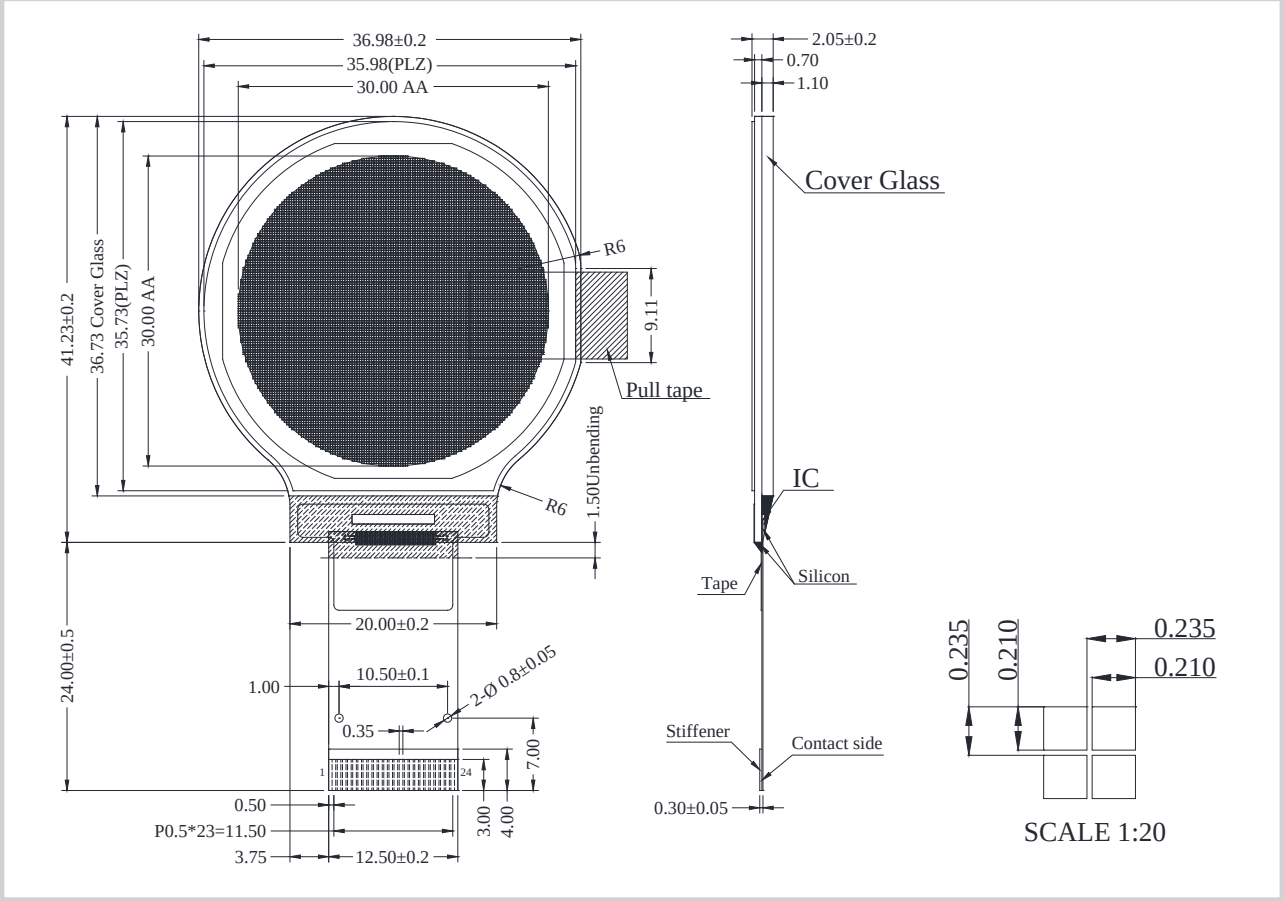

Feature

1. 128*128 Dot Matrix
2. Built-in controller SSD1327ZB
3. +3V Power supply
4. 1/128 duty
5. Interface: 6800 ,8080 , SPI , I2C
6. Polarizer optional

Pin No.	Symbol	Description
1	VSS	Ground Pin
2	VCC	Panel driving voltage
3	VCOMH	COM deselected level
4	VCI	Low voltage power supply
5	VDD	Voltage for logic
6	BS1	Interface selection
7	BS2	Interface selection
8	VSS	Ground Pin
9	IREF	SEG output current refer pin
10	CS#	Chip Select Pin
11	RES#	Reset Signal Pin
12	D/C#	Data/Command Control Pin
13	W/R#	Write Control
14	RD#	Read Control Signal
15~22	D0~D7	Data BUS
23	VCC	Panel driving voltage
24	NC	No Connection

Mechanical Data

Item	Standard Value	Unit
Module Dimension	36.98 x 36.73	mm
Viewing Area	32.00 x 32.00	mm
Active Area	30.00 x 30.00	mm
Dot Pitch	0.235 x 0.235	mm
Dot Size	0.210 x 0.210	mm

Electrical Characteristics

Item	Symbol	Condition	Standard Value			Unit
			min.	typ.	max.	
Input Voltage	VCI	---	2.8	3.0	3.3	V