NTH1601L Character 16x1

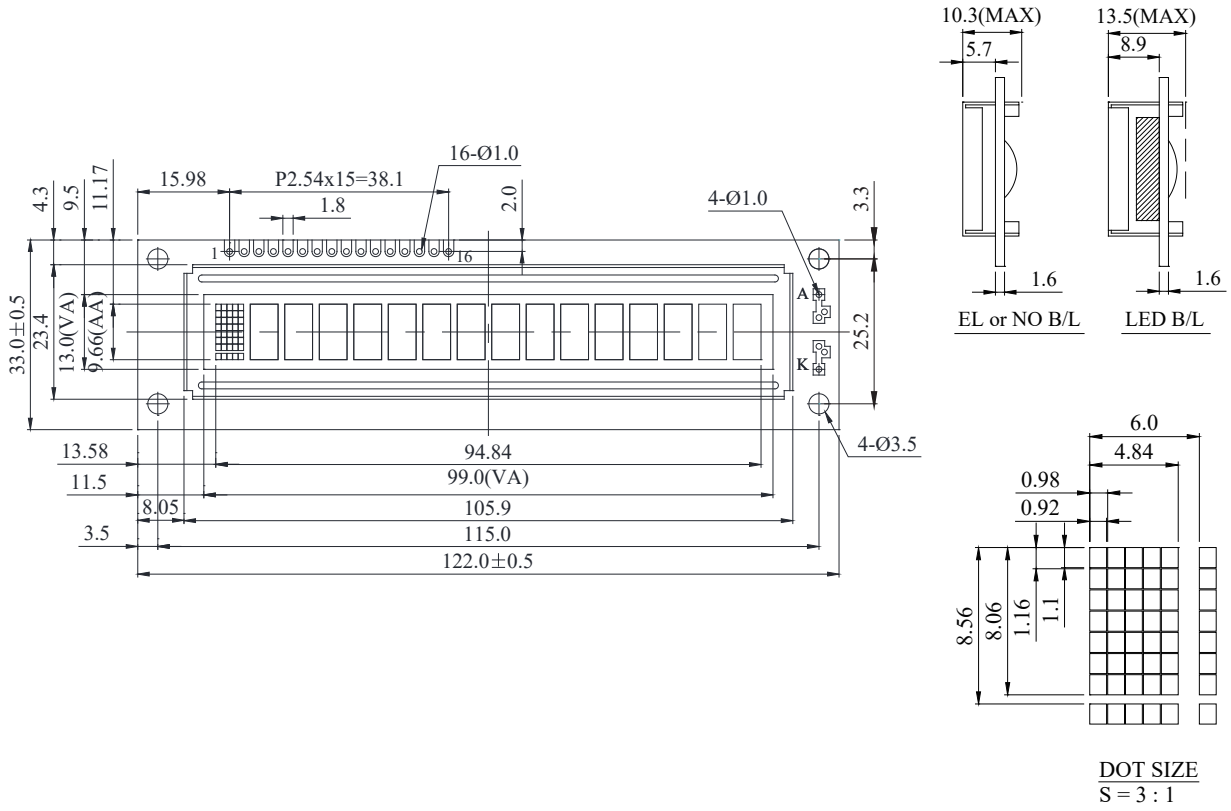

Feature

1.5x8 dots includes cursor
2.Bulit-in controller (ST7066 or Equivalent)
3.+5V power supply (Also available for +3V)
4.N.V, optional for +3V power supply
5.1/16 duty cycle
6.LED can be driven by PIN1, PIN2, PIN15, PIN16 or A and K
7.Interface : 6800, option SPI/I2C (RW1063 IC)

Pin No.	Symbol	Description
1	V_{SS}	Ground
2	V_{DD}	Power supply for logic
3	V_O	Contrast Adjustment
4	RS	Data/ Instruction select signal
5	R/W	Read/Write select signal
6	E	Enable signal
7	DB0	Data bus line
8	DB1	Data bus line
9	DB2	Data bus line
10	DB3	Data bus line
11	DB4	Data bus line
12	DB5	Data bus line
13	DB6	Data bus line
14	DB7	Data bus line
15	A	Power supply for B/L +
16	K	Power supply for B/L -

Mechanical Data

Item	Standard Value	Unit
Module Dimension	122.0 x 33.0	mm
Viewing Area	99.0 x 13.0	mm
Mounting Hole	115.0 x 25.2	mm
Character Size	4.84 x 8.06	mm

Electrical Characteristics

Item	Symbol	Standard Value typ.	Unit
Input Voltage	VDD	3/5	V
Recommended LCD Driving Voltage for Normal Temp. Version module @25ºC	VDD-VO	4.35	V

Display Character Address Code

Display position	1	2	3	4	5	6	7	8	9	10	11	12	13	14	15	16
DD RAM Address	00	01						07	40	41						47